SERVICE REPAIR

MANUAL

Hyster F010 (S30FT, S35FT, S40FTS) Forklift Service Repair Manual

HYSTER

PERIODIC MAINTENANCE

S30FT, S35FT, S40FTS [F010]; H30-35FT, H40FTS [G001]

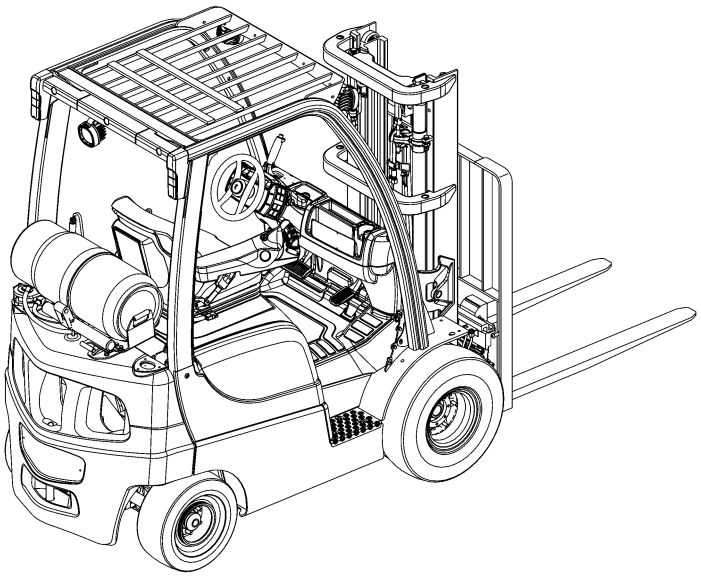

HYSTER

PART NO. 4120231

8000 SRM 1750

SAFETY PRECAUTIONS
MAINTENANCE AND REPAIR

- The Service Manuals are updated on a regular basis, but may not reflect recent design changes to the product. Updated technical service information may be available from your local authorized Hyster® dealer. Service Manuals provide general guidelines for maintenance and service and are intended for use by trained and experienced technicians. Failure to properly maintain equipment or to follow instructions contained in the Service Manual could result in damage to the products, personal injury, property damage or death.
- When lifting parts or assemblies, make sure all slings, chains, or cables are correctly fastened, and that the load being lifted is balanced. Make sure the crane, cables, and chains have the capacity to support the weight of the load.
- Do not lift heavy parts by hand, use a lifting mechanism.
- Wear safety glasses.
- DISCONNECT THE BATTERY CONNECTOR before doing any maintenance or repair on electric lift trucks. Disconnect the battery ground cable on internal combustion lift trucks.
- Always use correct blocks to prevent the unit from rolling or falling. See HOW TO PUT THE LIFT TRUCK ON BLOCKS in the Operating Manual or the Periodic Maintenance section.
- Keep the unit clean and the working area clean and orderly.
- Use the correct tools for the job.
- Keep the tools clean and in good condition.
- Always use HYSTER APPROVED parts when making repairs. Replacement parts must meet or exceed the specifications of the original equipment manufacturer.
- Make sure all nuts, bolts, snap rings, and other fastening devices are removed before using force to remove parts.
- Always fasten a DO NOT OPERATE tag to the controls of the unit when making repairs, or if the unit needs repairs.
- Be sure to follow the WARNING and CAUTION notes in the instructions.
- Gasoline, Liquid Petroleum Gas (LPG), Compressed Natural Gas (CNG), and Diesel fuel are flammable. Be sure to follow the necessary safety precautions when handling these fuels and when working on these fuel systems.
- Batteries generate flammable gas when they are being charged. Keep fire and sparks away from the area. Make sure the area is well ventilated.

NOTE: The following symbols and words indicate safety information in this manual:

WARNING

Indicates a hazardous situation which, if not avoided, could result in death or serious injury.

CAUTION

Indicates a hazardous situation which, if not avoided, could result in minor or moderate injury and property damage.

On the lift truck, the WARNING symbol and word are on orange background. The CAUTION symbol and word are on yellow background.

TABLE OF CONTENTS

General 1
Serial Number Data 1
How to Move a Disabled Lift Truck 2
How to Tow the Lift Truck 2
How to Put a Lift Truck on Blocks 3
How to Raise Drive Tires 3
How to Raise the Steering Tires 3
How To Clean A Lift Truck 5
Maintenance Schedule 6
Maintenance Procedures Every 8 Hours or Daily 14
How to Make Checks With Engine Stopped 14
Tires and Wheels 14
Safety Labels 14
Mast, Carriage, Lift Chains, Header Hoses, Attachment 14
Operator Restraint System 15
Emergency Locking Retractor (ELR) 15
Adjust Seat - Full Suspension 17
Adjust Seat - Internal Suspension 18
Hood and Seat Latches 19
Engine Compartment 19
Paper Application 19
Fuel, Oil, and Coolant Leaks, Check 20
Direct Electronic Pressure Regulator (DEPR), Check 20
Hydraulic Hoses 21
Coolant Hoses 21
Steering Column Gas Cylinder 21
Transmission 21
Hydraulic System Oil 22
Engine Oil 22
Air Filter 23
Forks 23
Remove 23
Inspect 25
Install 26
Adjust 26
How to Make Checks With Engine Running 27
Indicator Lights, Horn, Fuses, and Relays 27
Service Brakes 29
Brake Fluid Level 29
Operation, Check 30
Parking Brake 30
Engine Oil Pressure 30
Cooling System 31
Steering System 31
Control Levers and Pedals 32
Lift System, Operate 32
First Service After First 100 Hours of Operation 32
PSI 2.0L LPG Engine Oil and Oil Filter 32
Yanmar Engine Oil and Oil Filter 33
Maintenance Procedures Every 250 Hours or 6 Months 33

TABLE OF CONTENTS (Continued)

PSI 2.0L LPG Engine Oil and Oil Filter 33
Maintenance Procedures Every 500 Hours or 6 Months 34
Hydraulic System Oil 34
Battery 36
Yanmar 2.6L Engine Oil and Oil Filter Change 36
Yanmar 2.6L Engine Drive Belt 36
Clean Debris From Radiator Core 38
Transmission Oil Level 38
Forks 39
Mast Lubrication 40
Header Hose Checks 42
Lift Chain Lubrication 42
Tilt Cylinder Lubrication 43
Master Cylinder Rod End Pin Lubrication 44
Manual Hydraulic Levers Lubrication 44
Brake Fluid 44
Parking Brake Adjustment 45
Tie Rod Lubrication 45
Differential and Drive Axle Oil 46
Maintenance Procedures Every 1000 Hours or 6 Months 47
Valve Clearance, Check and Adjust, Yanmar 2.6L Diesel Engine 47
Drive Belt Check, PSI Engine 47
LPG Fuel Filter Element Replace, PSI 2.0L LPG Engine 47
Remove 47
Install 48
Fuel Filter Replacement, Yanmar Engine 49
Priming the Fuel System (Yanmar) 50
Lift Chains Wear Check 51
Lift Chain Lubrication 51
Integral Sideshift Carriage, Check Bearings 52
Integral Sideshift Carriage, Check Lower Mounting Hooks 53
Steering Axle 53
Control Levers and Pedals 54
Ignition System, PSI Engine 54
PCV System, PSI 2.0L LPG Engine 54
Maintenance Procedures Every 2000 Hours or 1 Year 54
Hydraulic System 54
Hydraulic Oil Filter Element, Replace 54
Remove 54
Clean and Inspect 55
Install 55
Hydraulic Tank Breather, Replace 55
Air Filter 58
Oxygen Sensor 59
PCV System, PSI Engines 60
Forks 60
Fuel Injector, Yanmar Engines 60
Integral Sideshift Carriage 61
Bearings, Replace 61
Transmission Oil and Oil Filter, Replace 61

Thanks very much for your reading,

Want to get more information,

Please click here, Then get the complete manual

JustClickHere

NOTE:

If there is no response to click on the link above, please download the PDF document first, and then click on it.

Have any questions please write to me:
admin@servicemanualperfect.com

TABLE OF CONTENTS (Continued)

Remove 61
Clean and Inspect 62
Install 62
Brake Fluid Change 62
Service Brakes 64
Drive Axle and Differential Oil, Change 65
Maintenance Procedures Every 4000 Hours or 2 Years 67
Hydraulic Oil, Change 67
Cooling System 68
Maintenance Procedures Every 5000 Hours 70
Timing Belt Change, PSI Engine 70
Safety Procedures When Working Near Mast 70
Hood Latch Check 73
Lift Chain Adjustments 74
Jump-Starting the Lift Truck 75
Jump-Starting Using a Battery Charger 75
Jump-Starting a Lift Truck Using Another Lift Truck 76
Welding Repairs 76
Overhead Guard Changes 77
Wheel Repair 77
General 77
How to Change Solid Rubber Tire (S Series) 77
Remove and Install Tire on Wheel 77
Pneumatic Tire With Tube, Repair 78
Remove Wheels From Lift Truck 78
Remove Tire From Wheel 79
Remove Tire From Two-Piece Wheel 79
Remove Tire From Three- and Four-Piece Wheels 80
Install Wheel in Tire 82
Install Two-Piece Wheel in Tire 82
Install Three- or Four-Piece Wheel in Tire 83
Add Air to Pneumatic Tires With Tube 84
Wheels, Install 85
Pneumatic Tubeless Tire, Repair 85
Remove Wheels From Lift Truck 85
Remove Tire From Wheel 85
Install Tire on Wheel 87
Add Air to Pneumatic Tubeless Tire 90
Wheels, Install 90
Solid Rubber Tires on Pneumatic Wheels, Change 90
Remove Tire From Wheel 90
Install Tire on Wheel 92
Adhesives and Sealants 94

This section is for the following models:

(S30FT, S35FT, S40FTS) [F010];
(H30-35FT, H40FTS) [G001]

"THE QUALITY KEEPERS"

HYSTER APPROVED PARTS

General

WARNING

DO NOT make repairs or adjustments unless you have both authorization and training. Repairs and adjustments that are not correct can make a dangerous operating condition.

WARNING

DO NOT operate a lift truck that needs repairs. Report the need for repairs immediately. If repair is necessary, put a DO NOT OPERATE tag in the operator's area. Remove the key from the key switch.

CAUTION

Disposal of lubricants and fluids must meet local environmental regulations.

This section contains a Maintenance Schedule and the instructions for maintenance and inspection.

The Maintenance Schedule has time intervals for inspection, lubrication, and maintenance for your lift truck. The service intervals are provided in both operating hours recorded on the lift truck hour meter, and in calendar time. Use the interval that occurs first.

The recommendation for the time intervals are for eight hours of operation per day. The time intervals must be decreased from the recommendations in the Maintenance Schedule for the following conditions:

- If the lift truck is used more than eight hours per day.
- If the lift truck must work in dirty operating conditions.
- Poor ground conditions.
- Intensive usage at high performance levels or other abnormal conditions will require more frequent servicing.

Your dealer for Hyster lift trucks has the equipment and trained service personnel to do a complete program of inspection, lubrication, and maintenance. A regular program of inspection, lubrication, and maintenance will help your lift truck provide more efficient performance and operate for a longer period of time.

Some users have service personnel and equipment to do the inspection, lubrication, and maintenance shown in the Maintenance Schedule. Service Manuals are available from your dealer for Hyster lift trucks to help users who do their own maintenance.

SERIAL NUMBER DATA

The serial number for the lift truck is on the Nameplate. It is also on the right side of the frame, under the floor plate.

HOW TO MOVE A DISABLED LIFT TRUCK

WARNING

Use extra caution when towing a lift truck if any of the following conditions exist:

1. **Brakes do not operate correctly.**
2. **Steering does not operate correctly.**
3. **Tires are damaged.**
4. **Traction conditions are bad.**
5. **The lift truck must be towed on a slope.**

If the engine cannot run, there is no power available for the hydraulic steering system. This condition can make the lift truck difficult to steer. Poor traction can cause the disabled lift truck or towing vehicle to slide. A slope will also make the lift truck more difficult to stop.

Never lift and move a disabled lift truck unless the disabled lift truck MUST be moved and cannot be towed. A lift truck used to move a disabled lift truck MUST have a capacity rating equal to or greater than the weight of the disabled lift truck. The capacity of the lift truck used to move a disabled lift truck must have a load center equal to half the width of the disabled lift truck. See the Nameplate of the disabled lift truck for the approximate total weight. The forks must extend the full width of the disabled lift truck. Put the weight center of the disabled lift truck on load center of the forks. Be careful to not damage the under side of the lift truck.

HOW TO TOW THE LIFT TRUCK

1. The towed lift truck must have an operator.
2. Tow the lift truck slowly.
3. Using a lift truck or a lifting device that can be attached to the mast (I.E. come-a-long), raise the carriage and forks approximately 30 cm (12 in.) from surface. Install a chain around a mast crossmember and the carriage, to prevent carriage and mast channels from moving.
4. If another lift truck is used to tow the disabled lift truck, that lift truck must have an equal or larger capacity than the disabled lift truck. Install approximately ½ of a capacity load on the forks of the lift truck that is being used to tow the disabled lift truck. This ½ capacity load will increase the traction of the lift truck. Keep the load as low as possible.
5. Use a towing link made of steel that fastens to tow pins in counterweights of both lift trucks. Slowly and carefully remove the slack out of the towing link. See Figure 1.

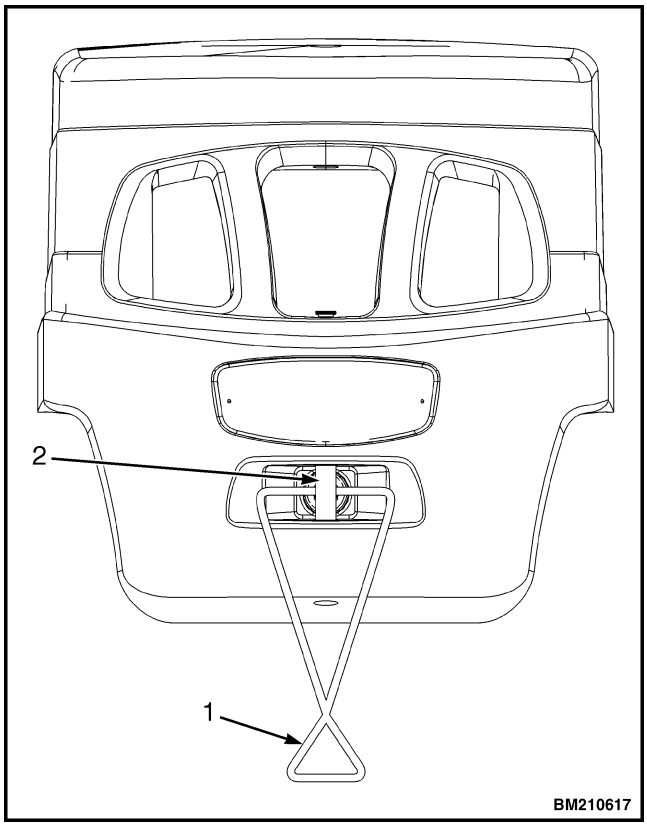

1. STEEL TOW LINK 2. TOW PIN

Figure 1. Towing the Lift Truck

HOW TO PUT A LIFT TRUCK ON BLOCKS

WARNING

The lift truck must be put on blocks for some types of maintenance and repair. The removal of the following assemblies will cause large changes in the center of gravity: mast, drive axle, engine and transmission, and the counterweight. When the lift truck is put on blocks, put additional blocks in the following positions to maintain stability:

1. **Before removing the mast and drive axle, put blocks under the counterweight so that the lift truck cannot fall backward.**
2. **Before removing the counterweight, put blocks under the mast assembly so that the lift truck cannot fall forward.**

The surface must be solid, even, and level when the lift truck is put on blocks. Make sure that any blocks used to support the lift truck are solid, one piece units.

NOTE: Some lift trucks have lifting eyes. These lifting eyes can be used to raise the lift truck so that blocks can be installed.

How to Raise Drive Tires

1. Put blocks on each side (front and back) of steering tires to prevent movement of lift truck. See Figure 2.
2. Put mast in vertical position. Put a block under each outer mast channel.
3. Tilt mast fully forward until drive tires are raised from surface.
4. Put additional blocks under frame behind drive tires.
5. If hydraulic system will not operate, use a hydraulic jack under the side of the frame near the front. Make sure jack has a capacity equal to at least half the weight of the lift truck. See Nameplate.

How to Raise the Steering Tires

1. Apply parking brake. Put blocks on both sides (front and back) of drive tires to prevent movement of lift truck. See Figure 2.
2. Use hydraulic jack to raise steering tires. Make sure jack has a capacity of at least 2/3 of total weight of lift truck as shown on the Nameplate.
3. Put jack under steering axle or frame to raise lift truck. Put blocks under frame to support lift truck.

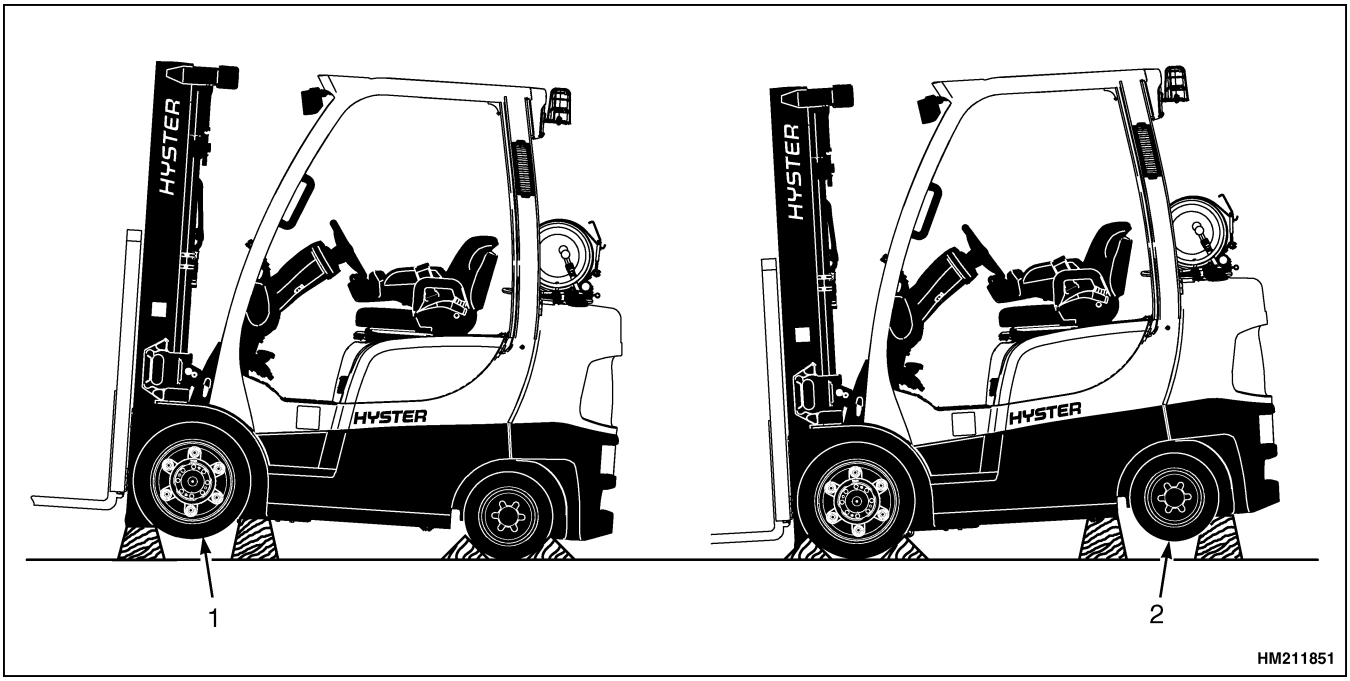

1. DRIVE TIRES
2. STEERING TIRES

Figure 2. Put Lift Truck on Blocks

HOW TO CLEAN A LIFT TRUCK

WARNING

Engine, exhaust system components and other components are hot to the touch. Be sure lift truck components are cool before starting inspection and cleaning, or personal injury may occur.

WARNING

Compressed air can move particles so that they cause injury to the user or to other personnel. Make sure that the path of the compressed air is away from all personnel. Wear protective goggles or a face shield to prevent injury to the eyes.

CAUTION

Units may be washed with a non-heated pressure washer. Steam cleaning is not recommended in most instances, as condensation may form in electrical components causing damage or erratic behavior.

NOTE: Lift trucks used in paper applications may need cleaning beyond what is described here. Please refer to Step 7 section in the Maintenance Procedures Every 8 Hours or Daily section and to available Service Gram/ Bulletin for more detail.

If it becomes necessary to clean the fork lift, follow the guidelines listed below.

1. Assure truck components are cool before starting the cleaning procedure.
2. Disconnect the battery. If an electric truck, remove the traction battery.
3. Remove accumulated debris using a compressed air line and nozzle.
4. Lightly spray a non-corrosive cleaning agent onto the areas to be cleaned. This will help loosen grime, so close contact direct spraying will not be necessary.
5. Be sure to avoid directing the spray into electrical panel compartment. Ensure overspray does not come in contact with electrical components; do not spray water directly at electrical components, wiring connectors or electrical enclosures. Even sealed connectors may allow water egress under pressure or if connector is damaged.
6. Avoid spraying in areas containing electrical components such as:
   - Floor plates
   - Battery compartment
   - Dash/cowl assembly
   - Armrests with electrical components
7. Clean the battery compartment by using a clean cloth to wash the battery with water. Dry with compressed air. Care should be taken to keep moisture at a minimum as some units have a traction or hydraulic motor directly below the battery compartment.
8. DO NOT pressure wash the battery. Do not use hot water. For cleaning traction batteries, refer to the Battery section of the Service Manual.
9. DO NOT pressure wash lift chains, sheaves or load rollers in the mast assembly. Refer to the Mast Lubrication and Lift Chain Lubrication sections in the Maintenance Procedures Every 500 Hours or 6 Months section for proper cleaning procedures.
10. After cleaning, immediately start and run the lift truck to dry out components.

Maintenance Schedule

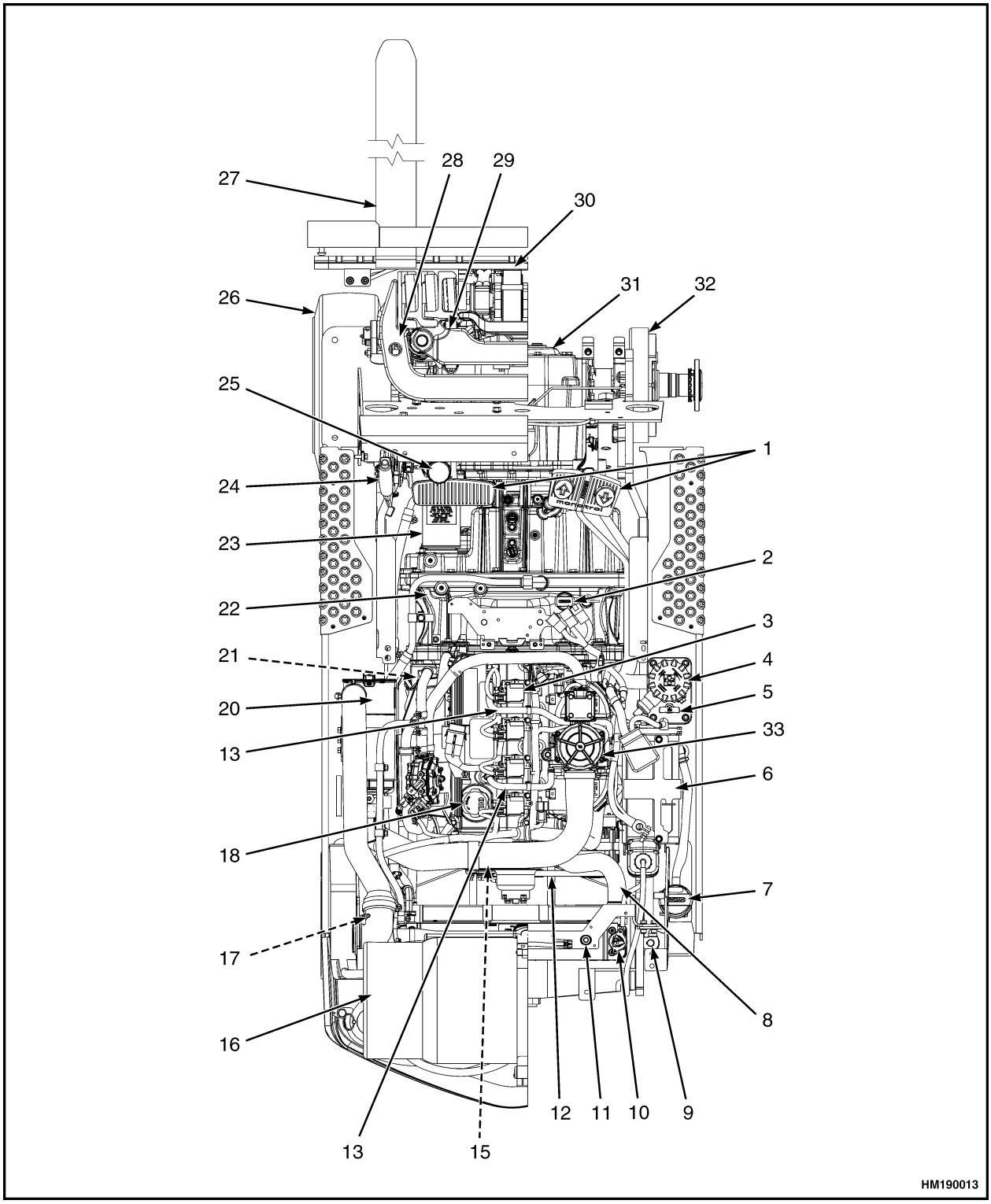

Figure 3. PSI 2.0L LPG Engine Maintenance and Lubrication Points, Lift Truck Models S30-35FT, S40FTS (F010) and H30-35FT, H40FTS (G001)

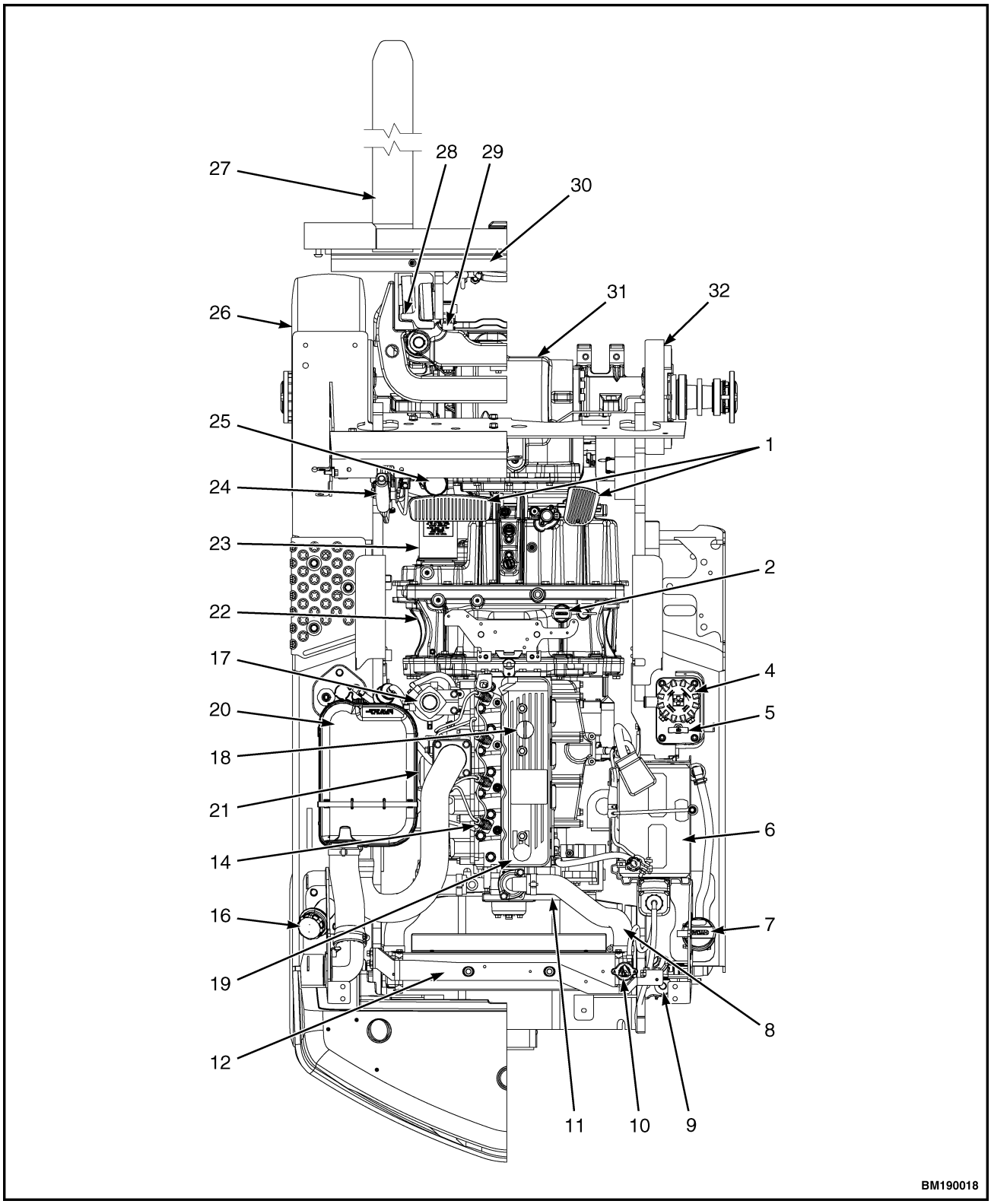

Figure 4. Yanmar 2.6L Engine Maintenance and Lubrication Points, Lift Truck Models H30-35FT, H40FTS (G001)

Table 1. Maintenance Schedule

Item No.	Item	8 hr/ 1 day	250 hr/ 6 mo	500 hr/ 6 mo	1000 hr/ 6 mo	2000 hr/ 1 yr	4000 hr/ 2 yr	Procedure or Quantity	Specification
26	Tires	X						Check Condition	See Nameplate
	Safety Labels	X						Replace as Necessary	See Parts Manual
28, 29, 30	Mast, Carriage, Header Hoses, Lift Chains, Attachment	X						Check Condition and Lubrication	See Parts Manual
	Seat Belt, Hip Restraints, and Seat Rails	X						Check Condition and Operation	
	Hood and Seat Latches	X						Check Condition and Operation	
	Engine Compartment	X						Remove Combustible Materials	
	Check for Leaks - Fuel, Oil, Water	X						Check for Leaks See NOTE 1.	
	Hydraulic Hoses	X						Check Condition	See Parts Manual
8	Coolant Hoses	X						Check Condition	See Parts Manual
16	Fuel Tank (LPG)	CIL						29.9 liter (7.9 gal) 15.2 kg (33.5 lb)	LPG - HD 5, HD 10
16	Fuel Tank (Diesel) H30-35FT, H40FTS (G001)	CIL						38.4 liter (10.1 gal)	Diesel No. 2
	Horn, Lights, Alarms	X						Check Operation	
32	Service Brakes	X						Check Operation	
24	Parking Brake	X						Check Operation	
	Steering Controls and Steering Column Gas Cylinder	X						Check Condition and Operation	
22	Transmission	X						Check for Leaks	John Deere JDM J20C
22	Transmission	X						Check Operation	
5	Hydraulic Oil S30-35FT, S40FTS (F010)	X		X			C	27 liter (28.5 qt) See NOTE 2, NOTE 3, and NOTE 13.	ISO VG 46 Hydraulic Oil -15°C (5°F) and Above
5	Hydraulic Oil H30-35FT, H40FTS (G001)	X		X			C	25.6 liter (27 qt) See NOTE 2, NOTE 3, and NOTE 13.	ISO VG 46 Hydraulic Oil -15°C (5°F) and Above
4	Hydraulic Oil Filter					C		1 Filter. See NOTE 13.	See Parts Manual
7	Hydraulic Tank Breather					C		Replace as Required. See NOTE 5.	See Parts Manual

X=Check C=Change L=Lubricate CIL=Check Indicator Light during operation

Table 1. Maintenance Schedule (Continued)

Item No.	Item	8 hr/ 1 day	250 hr/ 6 mo	500 hr/ 6 mo	1000 hr/ 6 mo	2000 hr/ 1 yr	4000 hr/ 2 yr	Procedure or Quantity	Specification
6	Battery and Cable Terminals			X				Clean See NOTE 5.	
18	Engine Oil PSI 2.0L LPG Engine	X CIL	C					4.9 liter (5.2 qt) See NOTE 4 and NOTE 5.	-7°C (20°F) and Below SAE 5W-20 16°C (60°F) and Below SAE 5W-30 -18°C (0°F) and Above SAE 10W-30 API SL ILSAC GF3 SAE J2362
21	Engine Oil Filter PSI 2.0L LPG Engine		C					1 Filter See NOTE 4 and NOTE 5.	See Parts Manual
18	Engine Oil Yanmar 2.6L Engine (Diesel)	X CIL		C				10.2 liter (10.8 qt) See NOTE 4 and NOTE 5.	20°C (68°F) and Over SAE 40 10 to 30°C (50 to 86°F) SAE 30 0 to 20°C (32 to 68°F) SAE 20 -16 to 40°C (3 to 103°F) SAE 15W-40 -20 to 30°C (-4 to 86°F) SAE 10W-30 -10 to 10°C (14 to 50°F) SAE 20W -20 to 10°C (-4 to 50°F) SAE 10W
21	Engine Oil Filter Yanmar 2.6L Engine (Diesel)			C				1 Filter See NOTE 4 and NOTE 5.	See Parts Manual
20	Air Filter	X CIL				C		1 Filter See NOTE 5, NOTE 6, and NOTE 10.	See Parts Manual
12	Drive Belt PSI 2.0L LPG Engine				X			Check for Wear and Damage. Replace if Needed. See NOTE 5.	See Parts Manual
X=Check C=Change L=Lubricate CIL=Check Indicator Light during operation									

Table 1. Maintenance Schedule (Continued)

Item No.	Item	8 hr/ 1 day	250 hr/ 6 mo	500 hr/ 6 mo	1000 hr/ 6 mo	2000 hr/ 1 yr	4000 hr/ 2 yr	Procedure or Quantity	Specification
11	Drive Belt Yanmar 2.6L Engine			X				Check for Wear and Damage. Adjust as Needed. See NOTE 5.	See Parts Manual
	Engine Idle Speed PSI 2.0L LPG Engine		X					See NOTE 5.	800 ±25 rpm
	Engine Governed Speed PSI 2.0L LPG Engine		X					See NOTE 5.	No Load 2400 ±25 rpm Standard & Engine Mode 2: ECO Mode Transmission Temperature 50°C (122°F) 2025 ±35 rpm
	Engine Idle Speed Yanmar 2.6L (Diesel)			X				See NOTE 5.	825 ±25 rpm
	Engine Governed Speed Yanmar 2.6L (Diesel)			X				See NOTE 5.	No Load 2400 ±25 rpm Standard & Engine Mode 2: ECO Mode Transmission Temperature 50°C (122°F) 2025 ±35 rpm
13	PCV System PSI 2.0L LPG Engine				X	C		Replace as Necessary See NOTE 11.	See Parts Manual
	Oxygen Sensor					X			Check Indicator Light
19	Valve Adjustment Yanmar Engines Only				X			Adjust as Required	Intake 0.20 mm (0.008 in.) Cold Exhaust 0.20 mm (0.008 in.) Cold
X=Check C=Change L=Lubricate CIL=Check Indicator Light during operation									

Table 1. Maintenance Schedule (Continued)

Item No.	Item	8 hr/ 1 day	250 hr/ 6 mo	500 hr/ 6 mo	1000 hr/ 6 mo	2000 hr/ 1 yr	4000 hr/ 2 yr	Procedure or Quantity	Specification
33	Direct Electronic Pressure Regulator (DEPR) PSI 2.0L Engine	X						Check Condition. Replace as Necessary	See Parts Manual
	Vaporizer Regulator		X					Drain Oil. See NOTE 5.	
17	LPG Fuel Filter PSI 2.0L Engine Only				C			1 Filter	See Parts Manual
17	Fuel Water Separator, Diesel Yanmar 2.6L Diesel Engine				C			1 Filter	See Parts Manual
	In-Line Fuel Filter, Diesel Yanmar 2.6L Diesel Engine				C			1 Filter	See Parts Manual
15	Timing Belt PSI 2.0L Engine							Replace. See NOTE 5 See NOTE 14.	See Parts Manual
14	Fuel Injectors (Diesel) Yanmar 2.6 Diesel					X		4 Injectors	Check and Replace If Required
3	Spark Plugs PSI 2.0L Engine				C			4 Plugs	See Parts Manual 0.9 mm (0.035 in.).
10, 11	Cooling System PSI 2.0L Engine	X CIL					C	11.0 liter (11.6 qt)	See NOTE 12.
10, 12	Cooling System Yanmar 2.6L Engine	X CIL					C	11.5 liter (12.1 qt)	See NOTE 12.
	Clean Debris From Radiator Core			X				See NOTE 5.	
2	Transmission Oil (Aluminum Case)			X		C		13 liter (14 qt)	John Deere JDM J20C
23	Transmission Oil Filter					C		1 Filter See NOTE 4.	See Parts Manual
27	Forks	X		X		X		Check Condition	
28	Mast Sliding Surfaces and Load Roller Surfaces			L				Lubricate As Required See NOTE 8.	Multipurpose Grease See NOTE 7.

X=Check C=Change L=Lubricate CIL=Check Indicator Light during operation

Table 1. Maintenance Schedule (Continued)

Item No.	Item	8 hr/ 1 day	250 hr/ 6 mo	500 hr/ 6 mo	1000 hr/ 6 mo	2000 hr/ 1 yr	4000 hr/ 2 yr	Procedure or Quantity	Specification
28	Header Hoses			X				Check Condition	
29	Lift Chains	X						Check Lubrication See NOTE 9.	SAE 30W Engine Oil
29	Lift Chains			L	X, L			Lube as Required Check for Wear	SAE 30W Engine Oil
30	Mast Integral Sideshift Carriage	X		L				Lube as Required 2 Fittings	Multipurpose Grease See NOTE 7.
30	Integral Sideshift Carriage Fork Positioner			L				Lube as Required 2 Fittings See NOTE 5.	Multipurpose Grease See NOTE 7.
	Mast Pivots			L				2 Fittings	Multipurpose Grease See NOTE 7.
	Mast Integral Sideshift Carriage (Upper/Lower Bearings)			L	X	C		Lube as Required 2 Fittings 4 Bearings	Multipurpose Grease See NOTE 7. 2.5 mm (3/32 in.) Minimum Thickness
	Mast Integral Sideshift Carriage (Lower Mounting Hooks)				X			Check for Wear and Clearance. See NOTE 2 and NOTE 5.	0.76 mm (0.03 in.) Minimum Wear Limit.
	Tilt Cylinder Ends			L				4 Fittings	Multipurpose Grease See NOTE 7.
	Brake Master Cylinder Rod End Pin			L					SAE 10W-30 API SM ILSAC GF4 SAE J2362
	Manual Hydraulic Hand Levers			L					SAE 10W-30 API SM ILSAC GF4 SAE J2362

X=Check C=Change L=Lubricate CIL=Check Indicator Light during operation

Table 1. Maintenance Schedule (Continued)

Item No.	Item	8 hr/ 1 day	250 hr/ 6 mo	500 hr/ 6 mo	1000 hr/ 6 mo	2000 hr/ 1 yr	4000 hr/ 2 yr	Procedure or Quantity	Specification
25	Brake Fluid	CIL		X		C		0.25 liter (0.53 pt)	SAE J-1703 (DOT 3)
9	Steering Axle Tie Rod Ends			L				4 Fittings	Multipurpose Grease See NOTE 7.
9	Steering Axle King Pins				L			2 Fittings	Multipurpose Grease See NOTE 7.
1	Pedals, Levers, Seat Rails, Cables, Hinges, Linkages, Hood Latch				L			Lubricate as Necessary	Hyster Part No. 328388
32	Service Brakes					X		Check Lining Thickness	1.0 mm (0.040 in.) Minimum
31	Differential and Drive Axle Oil			X		C		5.0 liter (5.3 qt)	SAE 80W-90 or 85W-140

NOTE 1: Check fuel system for leaks prior to any service or maintenance activity.

NOTE 2: Heavy-duty or high-temperature operations require more frequent checks.

NOTE 3: Heavy-duty or contaminated applications will require hydraulic oil change at 2000 hours.

NOTE 4: Change engine oil and filter after first 100 hours of operation. Change transmission oil filter after first 500 hours of operation.

NOTE 5: Recommended service intervals are based on a normal application in a clean environment. Applications involving contaminated environments such as high levels of air borne debris (dust and waste paper); chemical or abrasive compounds; poor ground conditions; intensive usage at high performance levels; or other abnormal conditions will require more frequent servicing. At your request your Hyster dealer will advise you of the appropriate service intervals based on an application survey.

NOTE 6: In dirty or dusty environments, replace at 1000 hours or as needed.

NOTE 7: Multipurpose grease with 2 to 4% Molybdenum Disulfide.

NOTE 8: Lubricate mast every three months if unit has less than 1000 hours.

NOTE 9: Lubricate at first sign of visible surface rust.

NOTE 10: Do not open the air filter canister except to change the air filter element. See Maintenance Procedures Every 2000 Hours or 1 Year to change air filter element.

NOTE 11: Check every other engine oil change.

NOTE 12: Use Ethylene Glycol Boron-free Antifreeze. Purchase a pre-diluted 50/50 solution; or mix 50% concentrate with 50% distilled or deionized water.

NOTE 13: Hydraulic oil sampling and analysis is a recommended practice. See Hydraulic Cleanliness Procedures 1900SRM1620 for oil cleanliness and water content guidelines. For lift trucks operating in heavy duty applications or highly contaminated environments, take oil samples every 500 hours. Normal Operating conditions may allow for less frequent oil sampling. Oil sampling should be done just prior to all oil and filter changes.

NOTE 14: Change timing belt at 5000 hours. Use hour interval only.

X=Check C=Change L=Lubricate CIL=Check Indicator Light during operation

Maintenance Procedures Every 8 Hours or Daily

HOW TO MAKE CHECKS WITH ENGINE STOPPED

WARNING

DO NOT operate a lift truck that needs repairs. Report the need for repairs immediately. If repair is necessary, put a DO NOT OPERATE tag in the operator's area. If the lift truck is equipped with a key switch, remove the key from the key switch.

Put lift truck on a level surface. Lower carriage and forks, stop the engine, and apply parking brake. Open hood and check for leaks and conditions that are not normal. Clean any oil or fuel spills. Ensure all surfaces are free of oils, lubricants, fuel, and organic dust or fibers (paper, wood, cotton, agricultural grass/grain, etc.).

Tires and Wheels

Check tires for damage. Check tread and remove any objects that will cause damage. Check for bent or damaged rims. Check for loose or missing hardware. Remove any wire, strapping, or other material that is wrapped around the axle. See Figure 5.

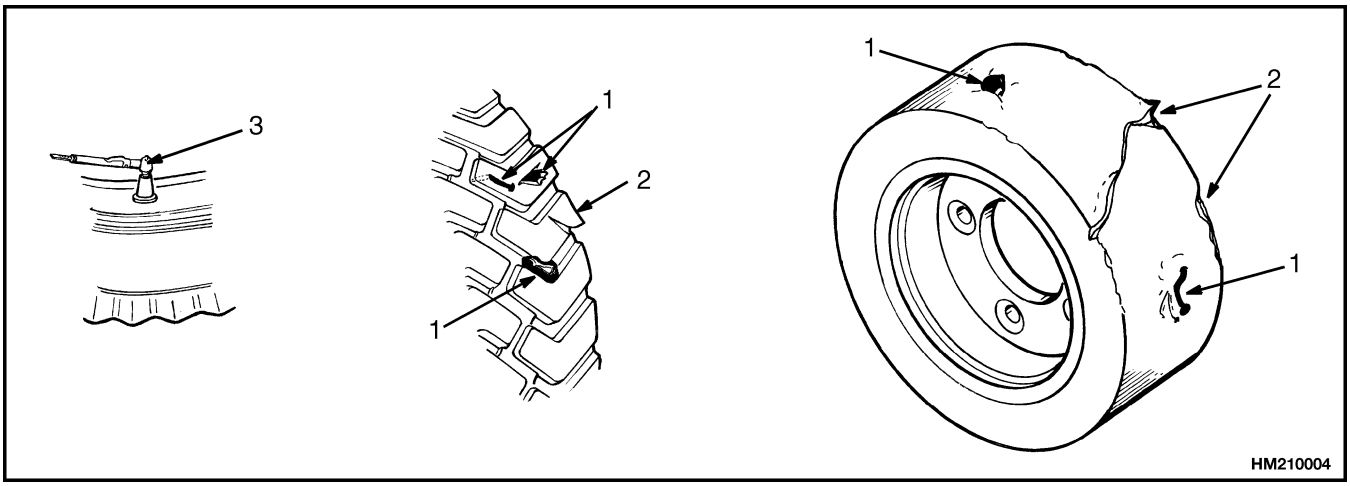

1. CHECK FOR DAMAGE (REMOVE NAILS, GLASS AND OTHER OBJECTS FROM THE TREAD)
2. MAKE SMOOTH EDGES
3. CHECK TIRE PRESSURE (PNEUMATIC TIRES)

Figure 5. Tire Check

Safety Labels

WARNING

Safety labels are installed on the lift truck to provide information about operation and possible hazards. It is important that all safety labels are installed on the lift truck and can be read.

Check that all safety labels are installed in the correct location on lift truck. See the Parts Manual, Model Description section in the Operating Manual or see Frame 0100SRM1735 for correct location of safety labels. See Parts Manual for part numbers of the safety labels.

Mast, Carriage, Lift Chains, Header Hoses, Attachment

WARNING

Lower the lift mechanism completely. Never allow any person under a raised carriage. DO NOT put any part of your body in or through the lift mechanism unless all parts of the mast are completely lowered and the engine is STOPPED. DO NOT try to correct the alignment of the fork tips by bending the forks or adding shims. Never repair damaged forks by heating or welding. Forks are made of special steel using special procedures. If either fork is damaged, replace the forks as a set.

1. Inspect welds on mast and carriage for cracks. Make sure that capscrews and nuts are tight.
2. Inspect channels for wear in areas where the rollers travel. Inspect rollers for wear or damage.
3. Inspect load backrest extension for cracks and damage.
4. If lift truck is equipped with an integral sideshift carriage or attachment, inspect the parts for cracks and wear. Make sure the parts that fasten the integral sideshift carriage or attachment to carriage are in good condition.
5. Visually inspect hoses/fittings for hydraulic leaks; hose cover for cuts, cracks or exposed reinforcement; defective/broken clamping devices or sheaves; proper tracking during operation. Adjust/repair/replace hose/components as necessary.
6. Check that lift chains are correctly lubricated. Use SAE 30W engine oil as necessary to lubricate lift chains.
7. Inspect lift chains for cracks or broken links, and worn or turned pins. See Figure 6.
8. Inspect chain anchors and pins for cracks and damage.
9. Make sure lift chains are adjusted so that they have equal tension. Adjustments or replacement of the lift chains must be done by authorized personnel.

Operator Restraint System

NOTE: The seat belt can be either black or red.

The seat belt, hip restraint, seat, hood, and hood latch are all part of the operator restraint system. Each item must be checked to make sure it is fastened correctly, functions correctly, and is in good condition. See Figure 7.

The lift truck is equipped with one of the three seat belt configurations.

- Seat belt with no operation interlock.
- Seat belt with operation interlock. Seat belt must be fastened for the lift truck to start or travel.
- Seat belt with sequencing interlock. Operator must be in the seat, then the seat belt fastened before lift truck will operate. This seat belt is used with the optional Operator Presence System.

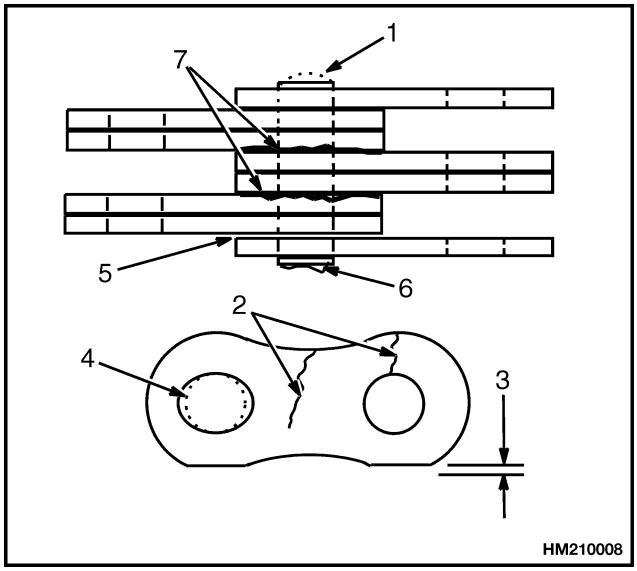

1. WORN PIN
2. CRACKS
3. EDGE WEAR
4. HOLE WEAR
5. LOOSE LEAVES
6. TURNED PIN
7. CORROSION

Figure 6. Lift Chain Check

Emergency Locking Retractor (ELR)

When the ELR style seat belt is properly buckled across the operator, the belt will permit slight operator repositioning without activating the locking mechanism. If truck tips, travels off a dock, or comes to a sudden stop, the locking mechanism will be activated and hold the operator's lower torso in the seat.

A seat belt that is damaged, worn, or does not operate properly will not provide protection when it is needed. The end of the belt must fasten correctly in the latch. The seat belt must be in good condition. Replace the seat belt if damage or wear is seen. See Figure 7.

NOTE: The following seat belt operation checks must be performed three times before replacing the seat belt assembly.

- With the hood closed and in the locked position, pull the seat belt slowly from the retractor assembly. Make sure the seat belt pulls out and retracts smoothly. If the seat belt cannot be pulled from the retractor assembly or the belt will not retract, replace the seat belt assembly.
- With the hood closed and in the locked position, pull the seat belt with a sudden jerk. Make sure the seat belt will not pull from the retractor assembly. If the seat belt can be pulled from the retractor, when it is pulled with a sudden jerk, replace the seat belt assembly.
- With the hood in the open position, make sure the seat belt will not pull from the retractor assembly. If the seat belt can be pulled from the retractor, with the hood in the open position, replace the seat belt assembly.

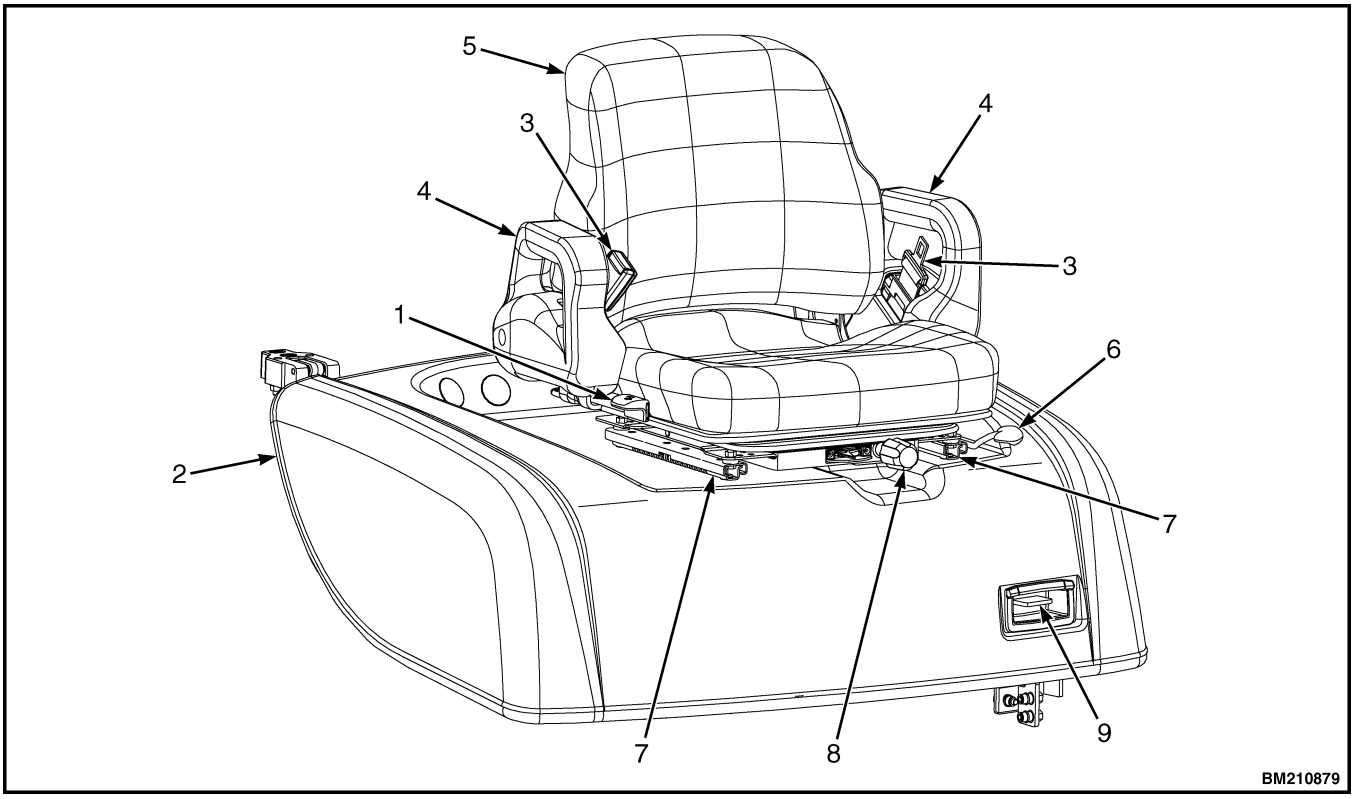

1. BACKWARD ANGLE ADJUSTMENT LEVER
2. HOOD
3. SEAT BELT
4. HIP RESTRAINTS
5. SEAT
6. FORWARD/BACKWARD ADJUSTMENT
7. SEAT RAIL
8. OPERATOR WEIGHT ADJUSTMENT
9. HOOD LATCH

Figure 7. Hood and Seat Check

Adjust Seat - Full Suspension

Seat Position Adjustment (Standard Seat)

- Fore and aft adjustment - It is recommended that the seat be adjusted so that the thigh is horizontal to the ground in order to achieve the best ergonomic position. See Figure 7.

Seat Position Adjustment (Swivel Seat)

- The seat swivels 12 degrees to the right to allow the operator a more ergonomic position when driving in reverse.
- The seat swivels 5 degrees to the left to allow an easier exit of the truck.
- The neutral position is shown in Figure 8.

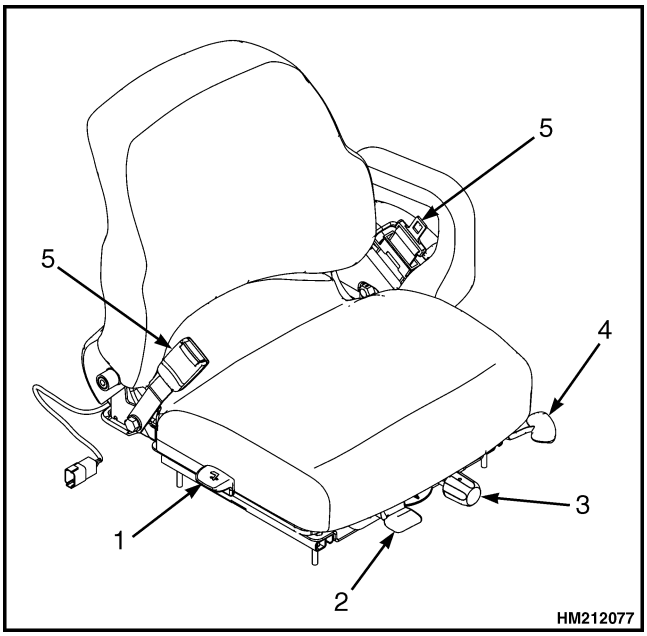

Figure 8. Swivel Seat Controls

Legend for Figure 8

NOTE: SWIVEL SEAT IS AN OPTIONAL FEATURE

1. BACKREST ANGLE ADJUSTMENT LEVER
2. SWIVEL ADJUSTMENT
3. OPERATOR WEIGHT ADJUSTMENT
4. FORWARD/BACKWARD ADJUSTMENT HANDLE
5. SEAT BELT

Seat Adjustment for Operator Weight

CAUTION

A major cause for high Whole Body Vibration is caused by the operator not adjusting the seat to his/her weight.

NOTE: It is important to adjust the weight setting for each operator.

NOTE: The seat is designed for maximum weight of 135 kg (298 lb).

- The target is for the "ride indicator" to fall between the arrows when the operator sits upright in the seat with the feet positioned on the pedals. This ensures that the operator is set at the midpoint of the 80 mm (3.15 in.) suspension.
- The handle can be turned as shown to increase or decrease the weight resistance. Pull handle out before turning. As the handle is turned the "stiffness" of the suspension can be felt to increase or decrease on which way the handle is turned.

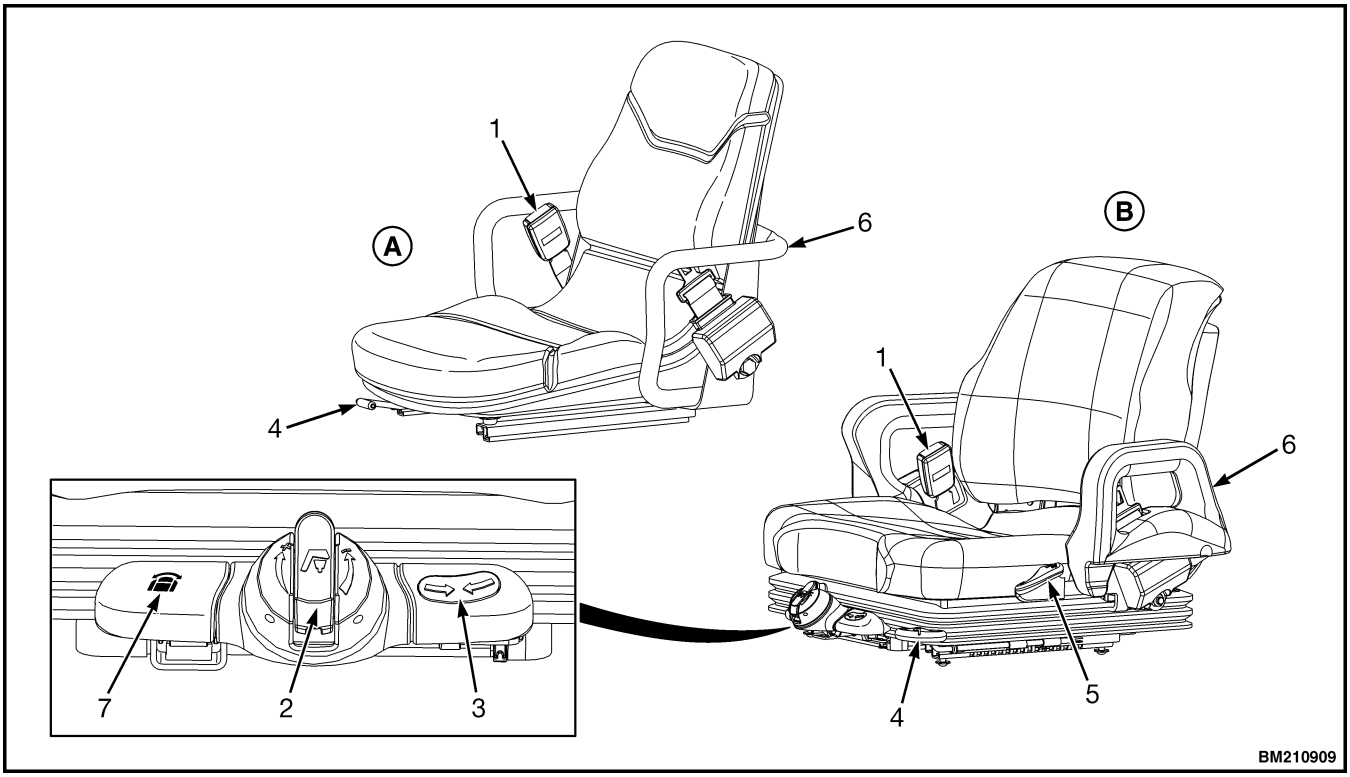

NOTE: OPTIONAL SWIVEL SEAT SHOWN.

A. STANDARD, NON SUSPENSION SEAT

B. FULL SUSPENSION SEAT

1. SEAT BELT
2. WEIGHT ADJUSTMENT HANDLE
3. RIDE POSITION INDICATOR
4. FORWARD/BACKWARD ADJUSTMENT LEVER
5. BACKREST ANGLE ADJUSTMENT LEVER
6. ARMREST
7. SWIVEL LATCH RELEASE LEVER

Figure 9. Seat Adjustment

Adjust Seat - Internal Suspension

Seat Position Adjustment (Swivel Seat)

- The seat swivels 10.5 degrees to the right to allow the operator a more ergonomic position when driving in reverse.
- The seat swivels 5 degrees to the left to allow an easier exit of the truck.
- The neutral position is shown in Figure 9.

Seat Adjustment for Operator Weight

CAUTION

A major cause for high Whole Body Vibration is caused by the operator not adjusting the seat to his/her weight.

NOTE: It is important to adjust the weight setting for each operator.

NOTE: The seat is designed for maximum weight of 135 kg (298 lb).

- The target is for the "ride indicator" to fall between the arrows when the operator sits upright in the seat with the feet positioned on the pedals. This ensures that the operator is set at the midpoint of the 40 mm (1.57 in.) suspension.
- The weight adjustment handle can be turned left or right to increase or decrease the weight resistance. As the weight adjustment knob is turned the "stiffness" of the suspension can be felt to increase or decrease on which way the weight adjustment knob is turned.

Hood and Seat Latches

Make sure seat rails and latch striker are not loose. Seat rails must lock tightly in position, but move freely when unlocked. See Figure 7. Seat rails must be correctly fastened to the hood and the hood fastened to hinges on frame. Try to lift the hood to make sure it is fastened correctly and will not move. If adjustment is required, go to Hood Latch Check

Engine Compartment

Check for the presence of any combustible material such as paper, leaves, etc. Remove any combustible materials.

Paper Application

Vehicles used in paper applications require regular inspection and cleaning to minimize the risk of fire. This should be done at least once every eight hours or more frequently depending upon operating environment. The paper application option will help limit the contact of paper or tissue scraps to hot surfaces under the hood, but frequent maintenance is required.

WARNING

Engine and exhaust system components are hot to touch. Be sure lift truck components are cool before starting inspection and cleaning or personal injury may occur.

Ensure truck engine cools properly by allowing it to idle for several minutes. Shutting truck down while hot will not allow engine to cool quickly due to the loss of coolant circulation. The heat trapped under the hood may actually increase engine temperature because of no heat transfer through the radiator. With engine off and lift truck components cooled, check and clean the radiator and if equipped, radiator screen. Check engine manifold, exhaust pipes, muffler and catalytic converter for paper scraps. Clean as required. Check and clean engine compartment components, transmission, fan shroud, belly pan if equipped, and inside frame ledges to avoid paper, dust and oil accumulation. Check axle and cowl openings for paper buildup and bailing wire. Remove any debris.

WARNING

Compressed air can move particles so that they cause injury to the user or to other personnel. Make sure that the path of the compressed air is away from all personnel. Wear protective goggles or a face shield to prevent injury to the eyes.

CAUTION

Air pressure, nozzle or extension tube may cause damage to exhaust wraps and radiator fins. Assure that air pressure, nozzle or extension tube does not damage exhaust wraps or radiator fins.